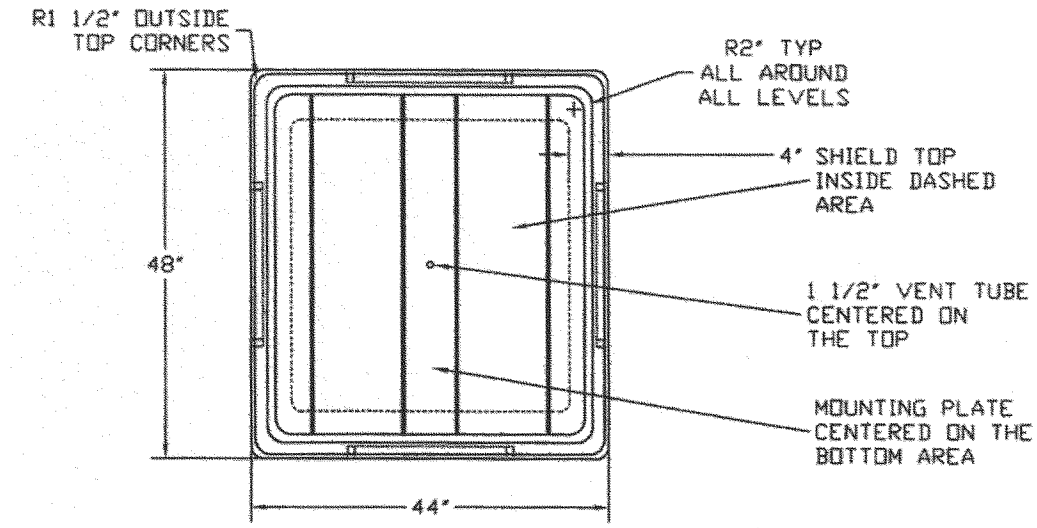

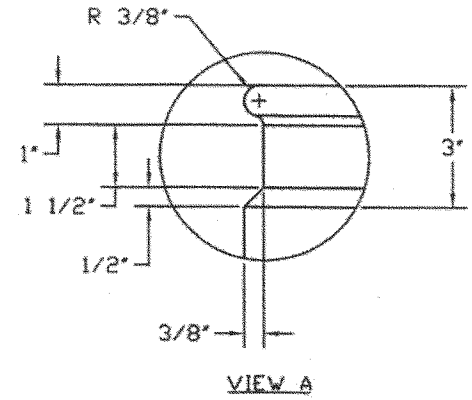

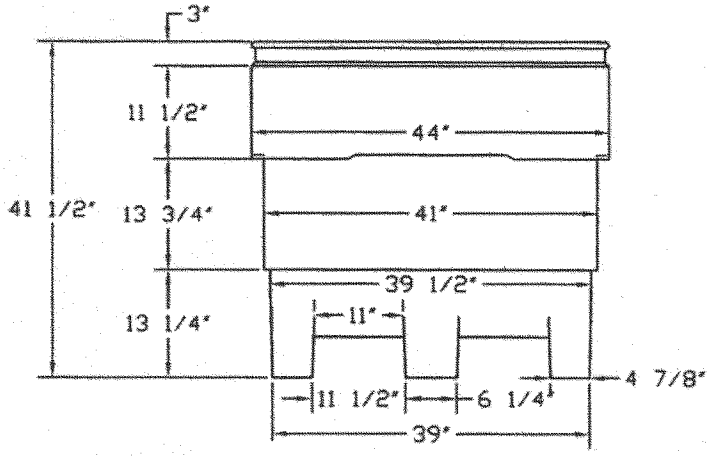

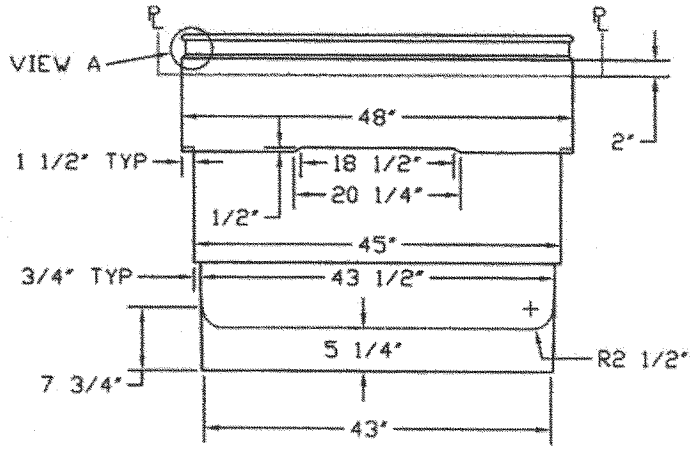

RMI-T
3024 S. I-35
Gainesville, Texas 76240
Phone: 940-668-8596

This drawing may not be used for any purpose other than by the owner. The drawing and design are property of Rotonics Manufacturing, Inc. All dimensions shown are outside part dimensions in inches, and may vary due to material shrinkage. Specifications are subject to change without notice. Gallons and weights are approximate only.

Rotonics Manufacturing Inc.
www.rotonics.com

BV-40R Rhino Bins

DRAWN BY	DATE	SCALE	DWG. NO.	REV.
Florida	11/18/02			