THIS DRAWING MY NOT BE USED FOR ANY PURPOSE OTHER THAN BY THE OWNER. THE DRAWING & DESIGN ARE PROPERTY OF ROTONICS MANUFACTURING, INC. ALL DIMENSIONS SHOWN ARE OUSIDE PART DIMENSIONS IN INCHES, AND MAY VARY DUE TO MATERIAL SHRINKAGE. SPECIFICTIONS ARE SUBJECT TO CHANGE WITHOUT NOTICE. GALLONS AND WEIGHTS ARE APPROXIMATE ONLY.

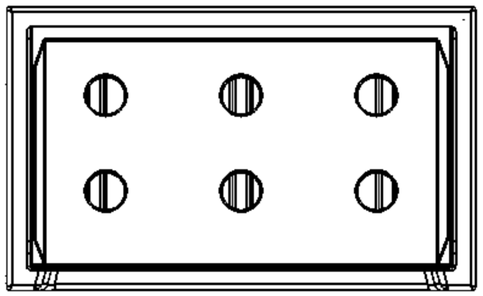

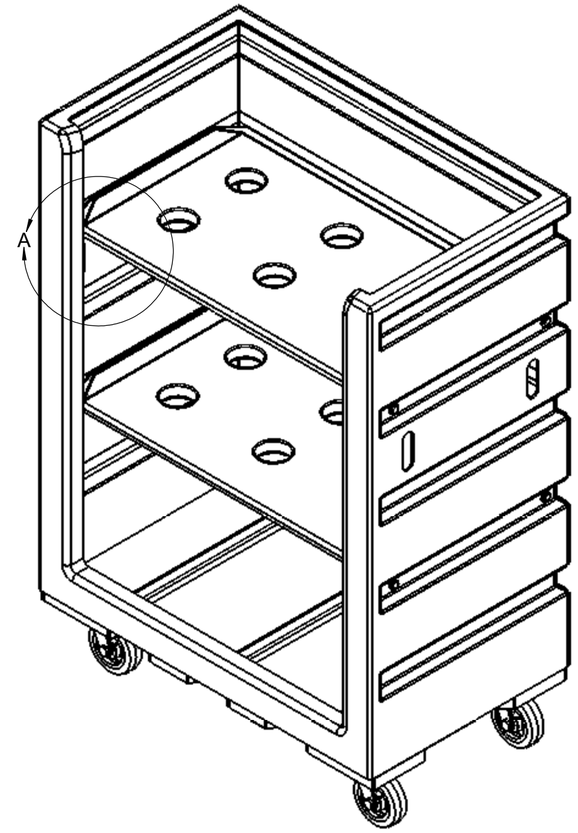

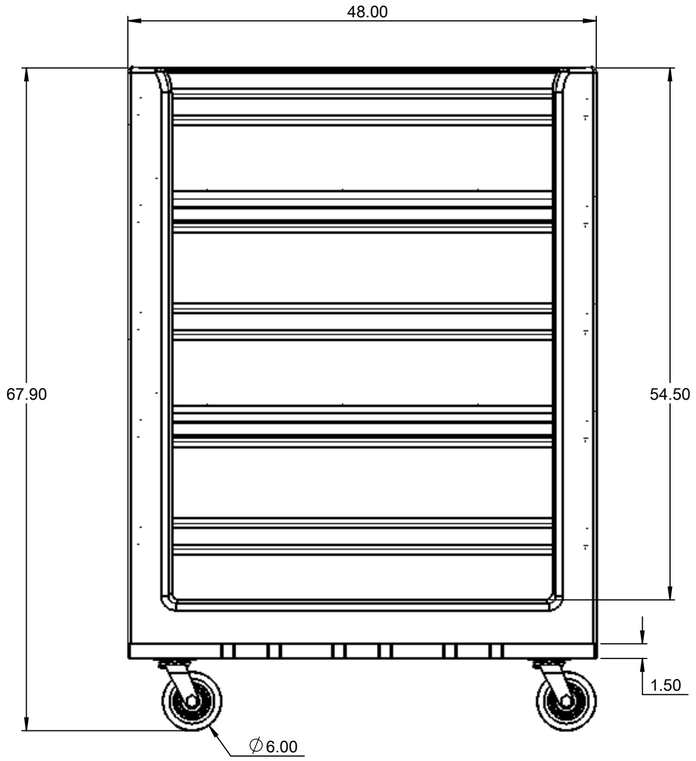

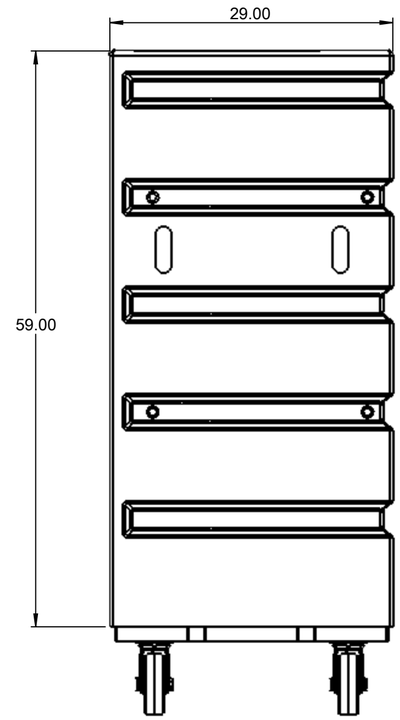

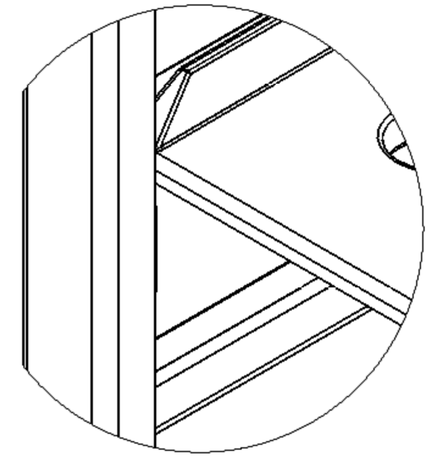

DETAIL A
SCALE 1 : 4

ROTONICS MFG, INC. www.rotonics.com 800-423-8539		4700 Mitchell Street N. Las Vegas, NV 89081 Phone: 702-643-2644 Fax: 702-643-2641	
TITLE: LET50 PLASTIC SHELVES			
DRAWN BY: S CAMPBELL	DATE: 07/31/09	DWG. NO. LET50	REV: A
		SCALE: 1:12	SHEET 1 OF 1